CIRCUITO ORIGINAL

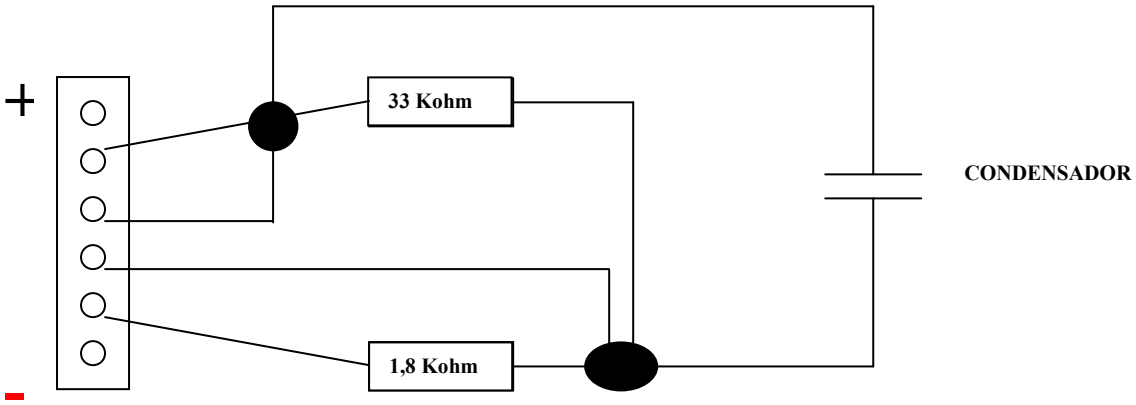
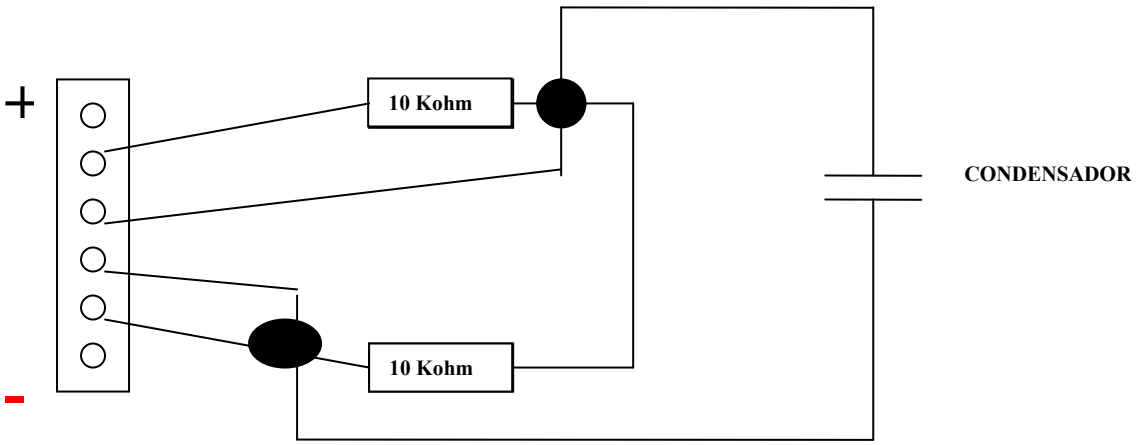
CIRCUITO ALL BATERIES